Jonsered

SERVICE

5

I0100036

IPL, 580 RDE, 2001-03, 106 27 18-61

580 RDE

Spare parts
Ersatzteile
Pièces détachées
Reserve onderdelen
Repuestos
Reservdelar

106 27 18-61

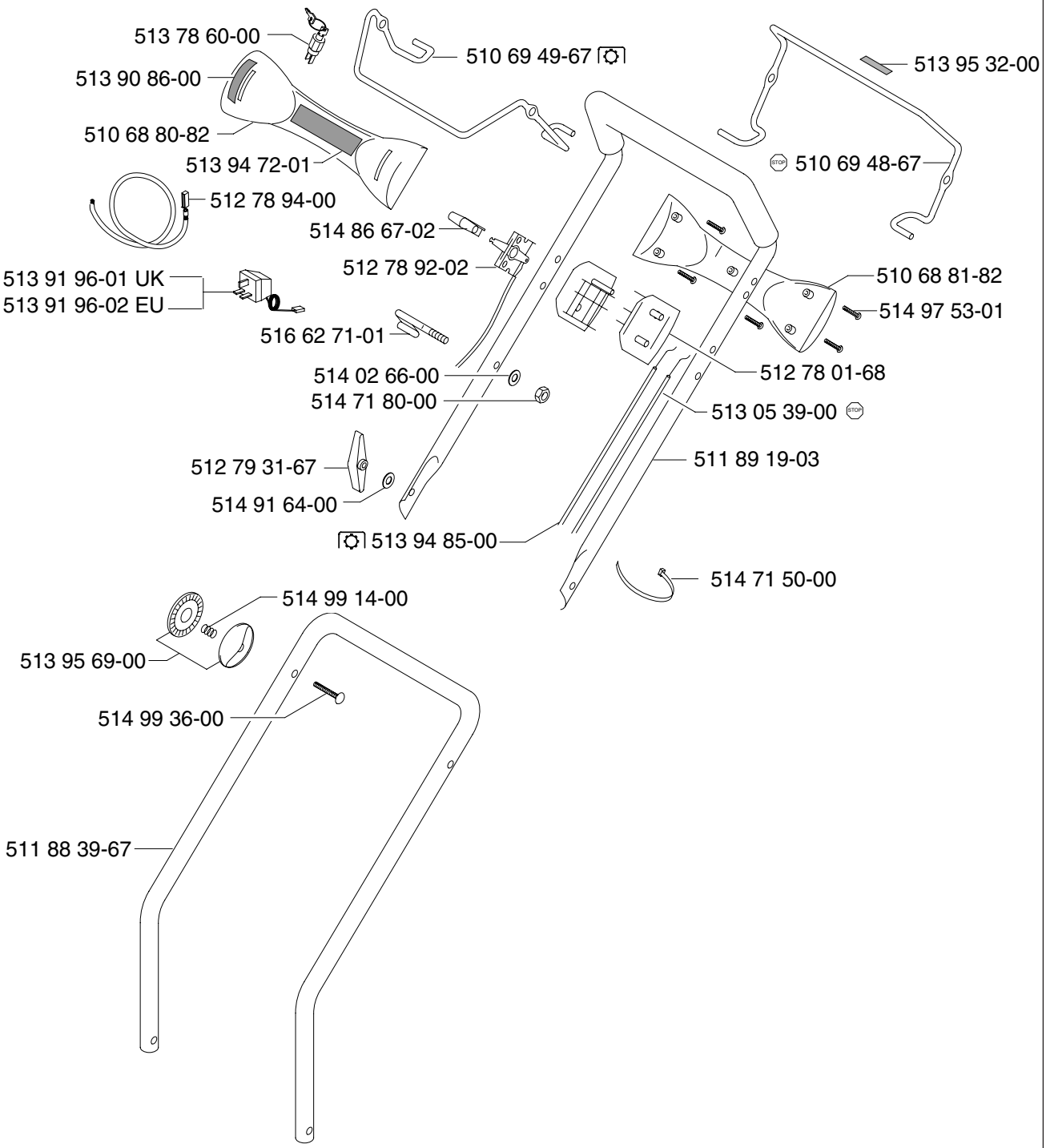
513 78 60-00
513 90 86-00
510 68 80-82
513 94 72-01
512 78 94-00
513 91 96-01 UK
513 91 96-02 EU
516 62 71-01
514 86 67-02
512 78 92-02
514 02 66-00
514 71 80-00
512 79 31-67
514 91 64-00
513 94 85-00
510 69 49-67
513 95 32-00
510 69 48-67
510 68 81-82
514 97 53-01
512 78 01-68
513 05 39-00
511 89 19-03
514 71 50-00
514 99 14-00
513 95 69-00
514 99 36-00
511 88 39-67

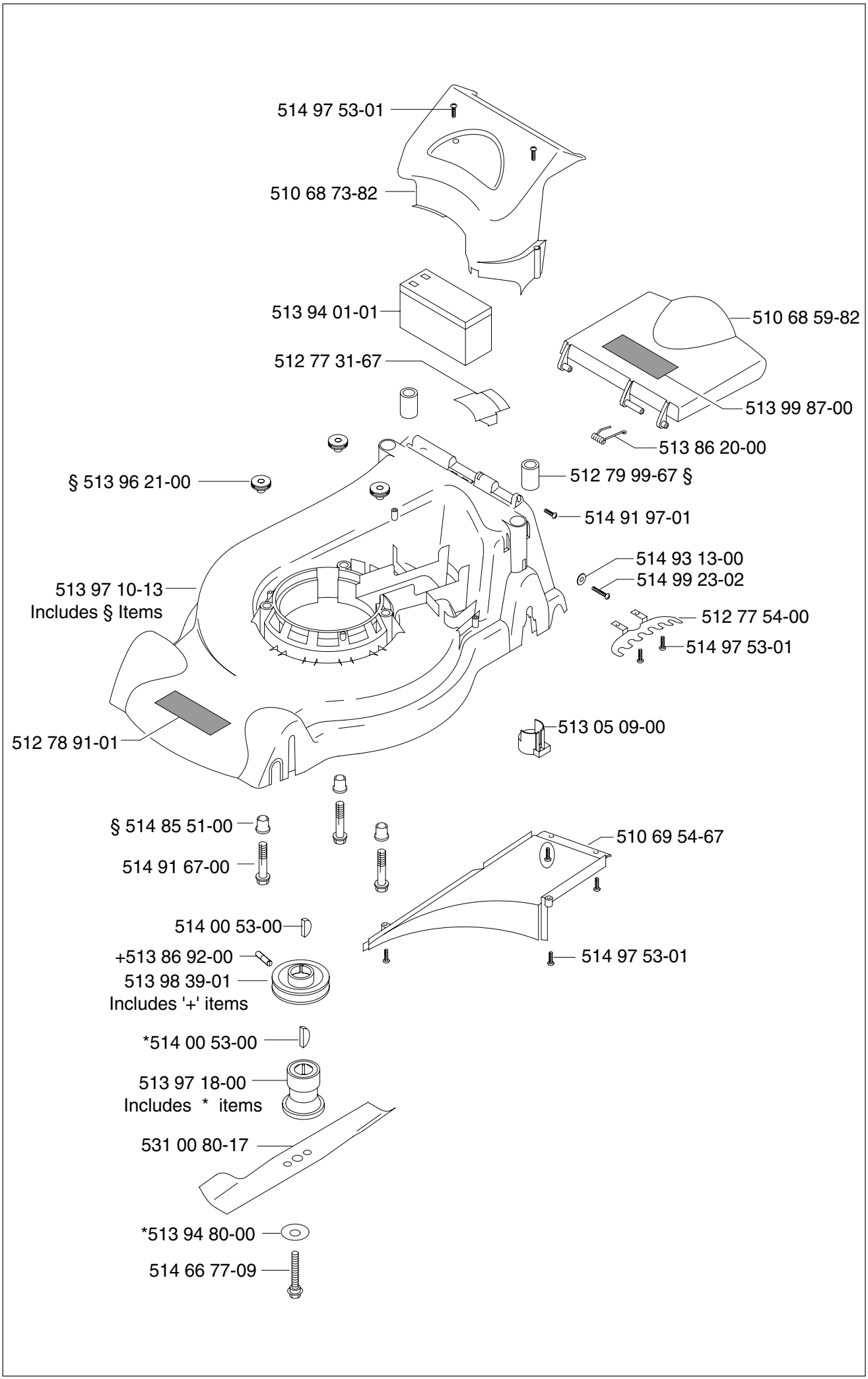
514 97 53-01
510 68 73-82
513 94 01-01
512 77 31-67
510 68 59-82
513 99 87-00
513 86 20-00
§ 513 96 21-00
512 79 99-67 §
514 91 97-01
514 93 13-00
514 99 23-02
513 97 10-13
Includes § Items
512 77 54-00
514 97 53-01
512 78 91-01
513 05 09-00
§ 514 85 51-00
510 69 54-67
514 91 67-00
514 00 53-00
+513 86 92-00
514 97 53-01
513 98 39-01
Includes '+' items
*514 00 53-00
513 97 18-00
Includes * items
531 00 80-17
*513 94 80-00
514 66 77-09

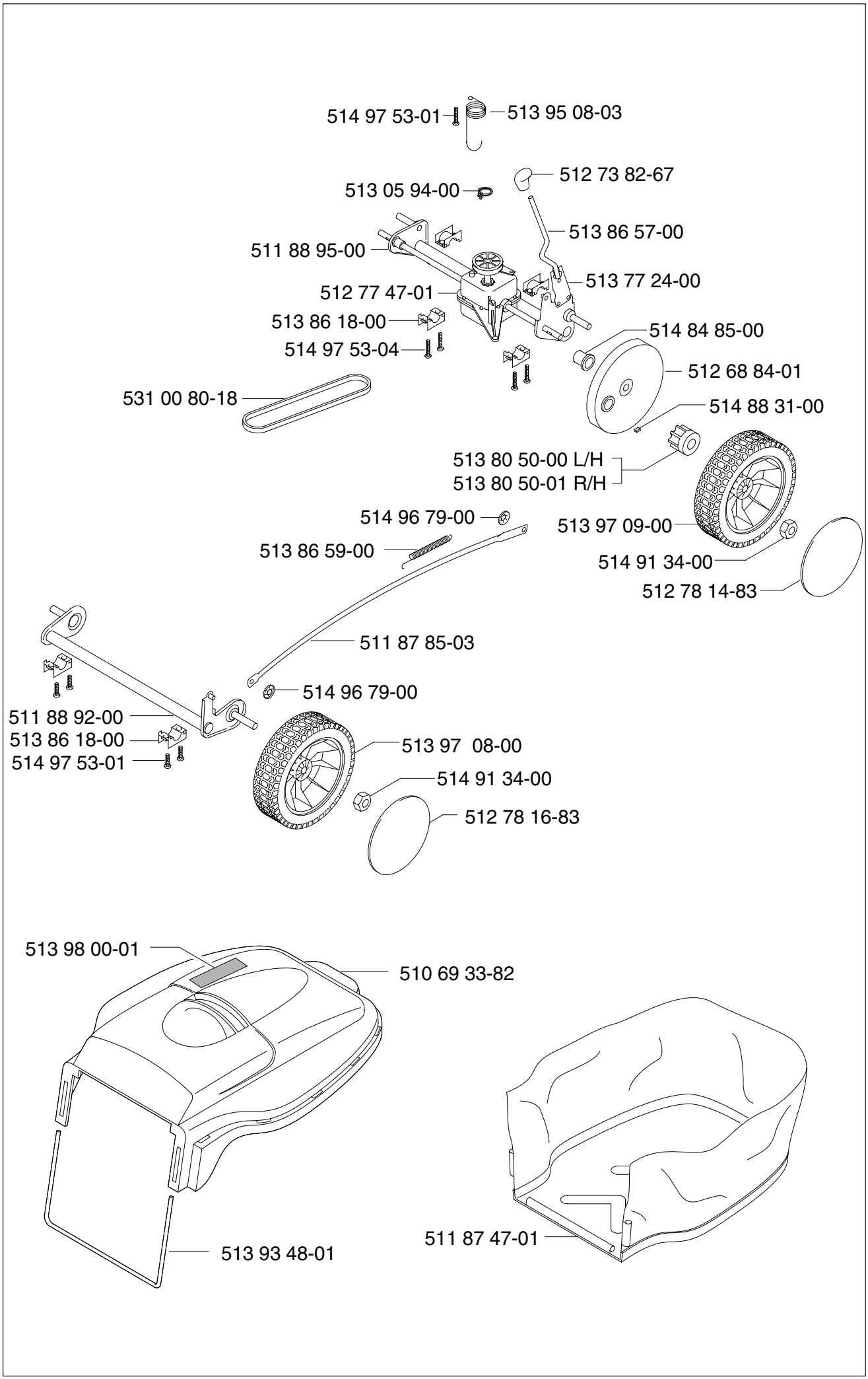
514 97 53-01
513 95 08-03
512 73 82-67
513 05 94-00
513 86 57-00
511 88 95-00
513 77 24-00
512 77 47-01
513 86 18-00
514 84 85-00
514 97 53-04
512 68 84-01
531 00 80-18
514 88 31-00
513 80 50-00 L/H
513 80 50-01 R/H
514 96 79-00
513 97 09-00
513 86 59-00
514 91 34-00
512 78 14-83
511 87 85-03
514 96 79-00
511 88 92-00
513 86 18-00
513 97 08-00
514 97 53-01
514 91 34-00
512 78 16-83
513 98 00-01
510 69 33-82
513 93 48-01
511 87 47-01